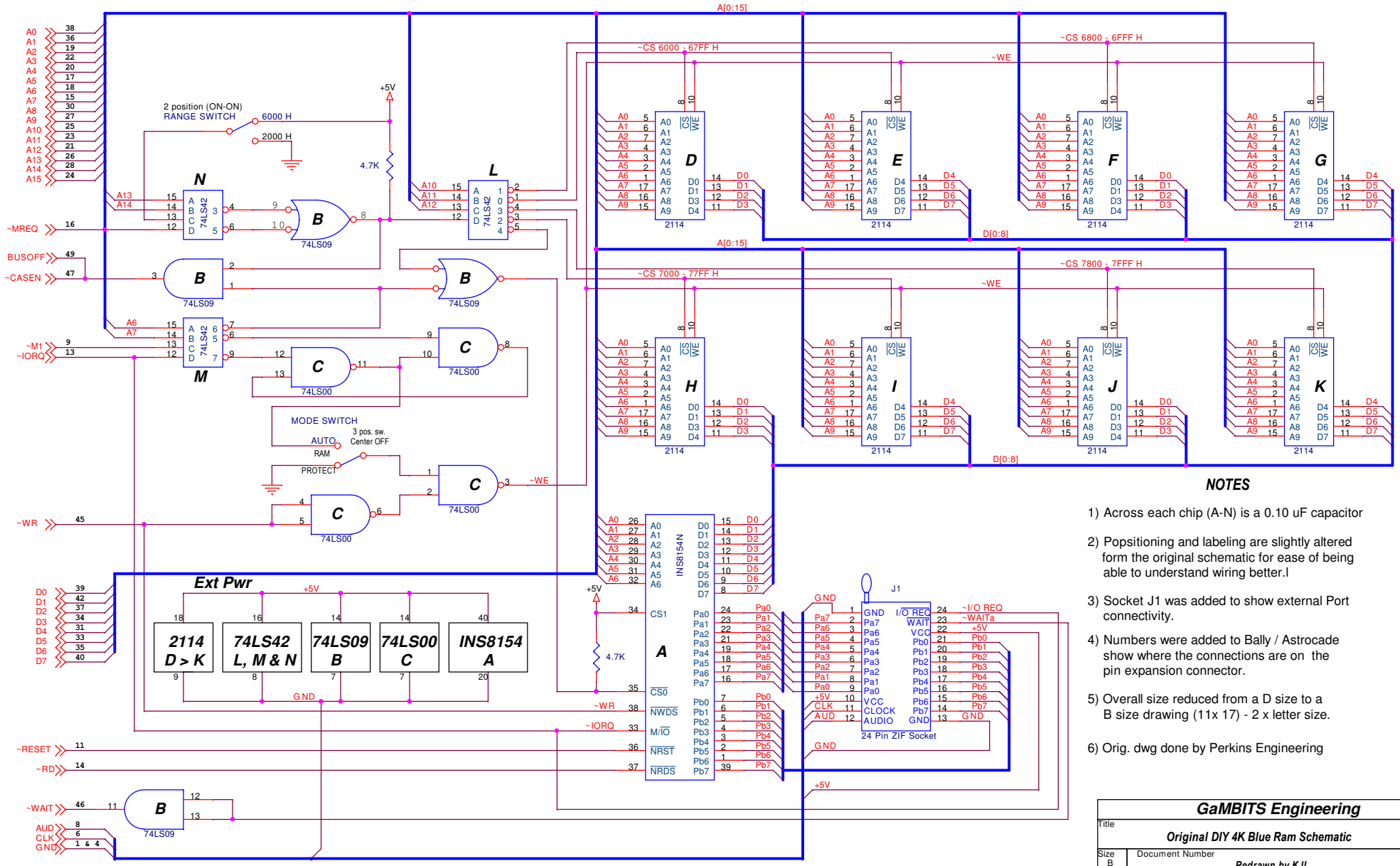

NOTES

1) Across each chip (A-N) is a 0.10 uF capacitor

2) Popsitioning and labeling are slightly altered form the original schematic for ease of being able to understand wiring better.l

3) Socket J1 was added to show external Port connectivity.

4) Numbers were added to Bally / Astrocade show where the connections are on the pin expansion connector.

5) Overall size reduced from a D size to a B size drawing (11x 17) - 2 x letter size.

6) Orig. dwg done by Perkins Engineering

GaMBITS Engineering	
Title	***Original DIY 4K Blue Ram Schematic***
Size B	Document Number ***Redrawn by KJL*** Rev **A**
Date: Friday, February 20, 2015	Sheet 1 of 1